AI-HSSE 2027

International Conference & Exhibition on

Artificial Intelligence in Health, Safety, Security & Environment

Supported By

Ministry of Oil and Environment

Hosted By

Transforming HSSE with AI:

Innovation | Intelligence | Resilience

EVENT BROCHURE

20 - 22 April 2027 | Gulf Convention Centre Kingdom of Bahrain | www.aihsse.com | #AIHSSE2027

Organised By iCONEX™

ABOUT

AI-HSSE 2027

The AI in Health, Safety, Security & Environment International Conference & Exhibition (AI-HSSE 2027) is a high-level international platform focused on practical, deployable, and governed AI solutions for safety-critical and high-risk sectors.

Inspired by the structure and clarity of leading regional and international conferences, AI-HSSE 2027 is designed to be policy-relevant, industry-driven, and solution-oriented, avoiding unnecessary complexity while delivering clear value to governments, regulators, operators, and technology providers.

The event positions Artificial Intelligence as a strategic enabler for preventing incidents, strengthening operational resilience, protecting critical infrastructure, and supporting ESG and sustainability objectives.

EVENT

POSITIONING

- Flagship international initiative hosted in the Kingdom of Bahrain
- Focused exclusively on AI applications in HSE, Security & Environment
- Government–industry–technology convergence
- Policy, regulation, and implementation aligned
- Exhibition-led with real-world use cases and proven technologies

WHY

AI-HSSE MATTERS

- Industries and governments are under increasing pressure to:
- Prevent major incidents and operational failures
- Protect critical infrastructure and national assets
- Meet stricter ESG, environmental, and safety regulations
- Manage cyber-physical risks and AI governance responsibly
- AI-HSSE 2027 responds to these challenges by focusing on what is implementable, what is regulated, and what delivers measurable impact

AI-HSSE 2027 LEADERSHIP

In the presence of

H.E. Dr. Mohamed bin Mubarak Bin Daina
Minister of Oil and Environment
Special Envoy for Climate Affairs
Kingdom of Bahrain

Conference Chair

Dr. Mustafa Al Sayed
Chairman
Bahrain Health & Safety Society

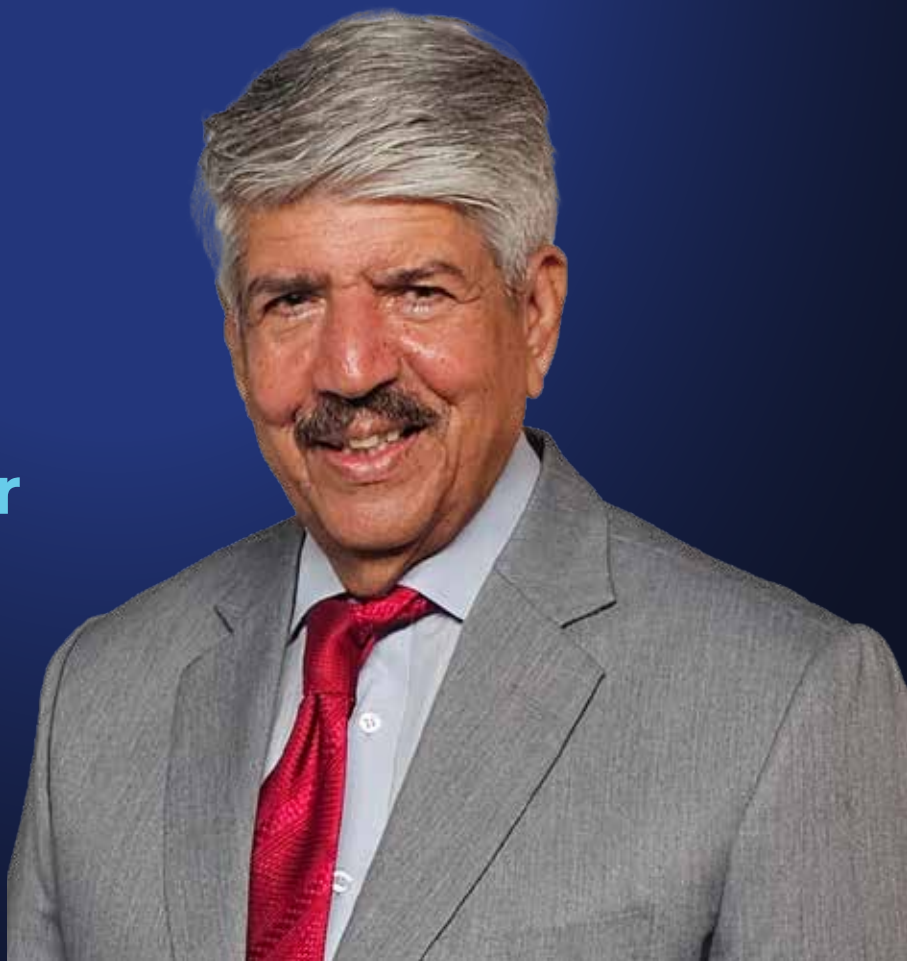

EVENT
FEATURES

- Ministerial & Executive Keynotes
- Leadership & Policy Panels
- Government–Industry Roundtables
- Thematic Forums
- Industry Case Studies & Technical Sessions
- Live AI Technology Demonstrations
- Innovation & AI Tech Exhibition Zones
- International Exhibition
- Targeted Workshops & Training Sessions
- Recognition & Award Ceremony
- High-Level Networking & Gala Dinner

WHAT TO
EXPECT

3000+
Global Attendees

1000+
Delegates

10+
Sponsors

10+
Industries

15+
Countries

75+
International Speakers

200+
Participating Companies

20+
Strategic & Technical Partners

WHY
ATTEND

- Gain direct insight from governments and regulators shaping AI governance in safety, security, and environmental sectors
- Discover real-world AI deployments improving risk prevention, resilience, and operational decision-making
- Explore deployable, compliant AI solutions for safety-critical and high-risk environments
- Learn from cross-industry case studies across sectors
- Connect with senior decision-makers and industry leaders through curated, highlevel networking

WHO SHOULD
ATTEND

- Ministers and senior government officials
- Regulators and policy makers
- CEOs, COOs, and board-level executives
- HSE, security, and risk directors
- Digital transformation and AI leaders
- Critical infrastructure and asset owners
- ESG and sustainability leaders
- Technology innovators and solution providers

PARTICIPATING
SECTORS

Oil & Gas

Energy & Power

Chemicals & Petrochemicals

Manufacturing & Industrial Operations

Construction & Infrastructure

Transportation, Aviation & Logistics

Maritime & Offshore

Healthcare & Pharma

Waste Management & Environmental Services

Government, Regulators & Emergency Authorities

Cybersecurity & Critical Infrastructure Protection

Smart Cities & Urban Development Authorities

AI, Digital Transformation & Automation Providers

Safety Equipment, PPE & Smart Wearables Manufacturers

WHY PARTNER WITH
AI HSSE 2027

AI-HSSE 2027 offers partners a high-credibility platform to engage directly with decision-makers responsible for **safety, security, environment, and national resilience**.

- Position your brand alongside government leadership and regulatory authorities
- Demonstrate deployable AI solutions to qualified industry and public-sector buyers
- Engage with senior HSE, security, operations, ESG, and digital transformation leaders
- Build visibility across a multi-industry, cross-sector international audience

WHY
EXHIBIT

- Showcase deployable, industry-ready AI solutions to decision-makers responsible for safety, security, and environmental performance
- Engage directly with government authorities, regulators, and critical infrastructure operators
- Generate high-quality leads from HSE, security, risk, ESG, and digital transformationleaders
- Position your brand within a government-supported, high-credibility international platform
- Build strategic partnerships across energy, infrastructure, manufacturing, transport, and environmental sectors

VISITOR
PROFILE

- Government ministries and regulatory authorities
- HSE, security, risk, and compliance leaders
- CIOs, CISOs, and digital transformation heads
- Operations, asset integrity, and engineering leaders
- ESG, sustainability, and environmental managers
- Critical infrastructure operators and emergency authorities

PARTNERSHIP
OPPORTUNITIES

EXCLUSIVE PARTNER — US$ 100000

Exclusive Benefits:

- 5 VIP invitations to the opening ceremony
- 2 Reserved tables for VIP Lunch & Dinner

Award presentation by Event Patron during Opening Ceremony (Media covered Event)

1 full-page A4 digital insert on Website & Mobile App

- Company logo on all conference publications
- Company logo branded on AI-HSSE 2027 website (exclusive positioning with hyperlink)

Company logo on the delegate lanyard

- Company logo on inaugural conference backdrop
- Partner's logo on invitation cards to be sent to conference guests

Premium exhibition booth at prime location (approx. 6m x 6m)

10 complimentary conference registrations

STRATEGIC PARTNER — US$ 75000

Exclusive Benefits:

- 4 VIP invitations to the opening ceremony
- 2 Reserved tables for VIP Lunch & Dinner

Award presentation by Event Patron during Opening Ceremony (Media covered Event)

1 full-page A4 digital insert on Website & Mobile App

- Company logo on all conference publications
- Company logo branded on AI-HSSE 2027 website (exclusive positioning with hyperlink)

- Company logo on inaugural conference backdrop

Complimentary exhibition space (approx. 6m x 5m)

8 complimentary conference registrations

PLATINUM PARTNER — US$ 50000

Exclusive Benefits:

- 3 VIP invitations to the opening ceremony
- 1 Reserved tables for VIP Lunch & Dinner

Award presentation by Event Patron during Opening Ceremony (Media covered Event)

Half-page A4 digital insert on Website & the Mobile App

- Company logo on all conference publications
- Company logo branded on AI-HSSE 2027 website (exclusive positioning with hyperlink)

- Company logo on inaugural conference backdrop

Complimentary exhibition space (approx. 6m x 4m)

6 complimentary conference registrations

GOLD PARTNER — US$ 40000

Exclusive Benefits:

- 2 VIP invitations to the opening ceremony
- 1 Reserved tables for VIP Lunch & Dinner

Award presentation by Event Patron during Opening Ceremony (Media covered Event)

Half-page A4 digital insert on Website & the Mobile App

- Company logo on all conference publications
- Company logo branded on AI-HSSE 2027 website (exclusive positioning with hyperlink)

Complimentary exhibition space (approx. 4m x 3m)

4 complimentary conference registrations

DELEGATE LANYARD PARTNER — US$ 35000

Exclusive Benefits:

- 2 complimentary conference registrations
- 1 VIP invitations to the opening ceremony

Award presentation by Event Patron during Opening Ceremony (Media covered Event)

Half-page A4 digital insert on Website & the Mobile App

- Company logo on all conference publications
- Company logo branded on AI-HSSE 2027 website (exclusive positioning with hyperlink)

Complimentary exhibition space (approx. 3m x 2m)

Exclusive branding on official delegate lanyards

SILVER PARTNER — US$ 30000

Exclusive Benefits:

- 2 complimentary conference registrations
- 1 VIP invitations to the opening ceremony

Award presentation by Event Patron during Opening Ceremony (Media covered Event)

Half-page A4 digital insert on Website & the Mobile App

- Company logo on all conference publications
- Company logo branded on AI-HSSE 2027 website (exclusive positioning with hyperlink)

Complimentary exhibition space (approx. 3m x 2m)

GALA NETWORKING DINNER (EXCLUSIVE) — US$ 30000

Exclusive Benefits:

- Designation as Exclusive Gala Networking Dinner Sponsor
- 3–5 minute welcome address by Sponsor's Senior Executive
- 1 VIP invitations to the opening ceremony
- 1 reserved table at the Gala Networking Dinner

- Company logo on Gala Dinner backdrop, Table centerpieces & all conference publications
- Company logo branded on AI-HSSE 2027 website (exclusive positioning with hyperlink)

2 complimentary conference registrations

ADDITIONAL SPONSORSHIP & ADVERTISING PACKAGES

ITEM	COST
Technical Session Excellence Award Sponsorship	US$ 15000
Digital Conference Proceedings Sponsorship (USB / Online Access)	US$ 12000
Exhibition Hall Pillar Branding Sponsorship	US$ 10000
Wi-Fi Sponsorship (Exclusive)	US$ 6000
Charging Stations Sponsorship (per station)	US$ 5000
Conference Programme Full Page Ad - Back Cover (Outside)	US$ 3500
Conference Programme Full Page Ad - Back Cover (Inside)	US$ 2800
Conference Programme Full Page Ad - Front Cover (Inside)	US$ 2200
Conference Programme Full Page Ad - Run of Page	US$ 1000
Post Show Report Full Page Ad - Back Cover (Outside)	US$ 3500
Post Show Report Full Page Ad - Back Cover (Inside)	US$ 2800
Post Show Report Full Page Ad - Front Cover (Inside)	US$ 2200

EXHIBITING
OPPORTUNITIES

SHELL SCHEME

US$ 550 per sqm (*Minimum 9 sqm*)

Includes all stand service facilities, a selection of display items, furniture, and electrical sockets.

RAW SPACE

US$ 450 per sqm (*Minimum 18 sqm*)

Provides the flexibility to build and design your own stand.

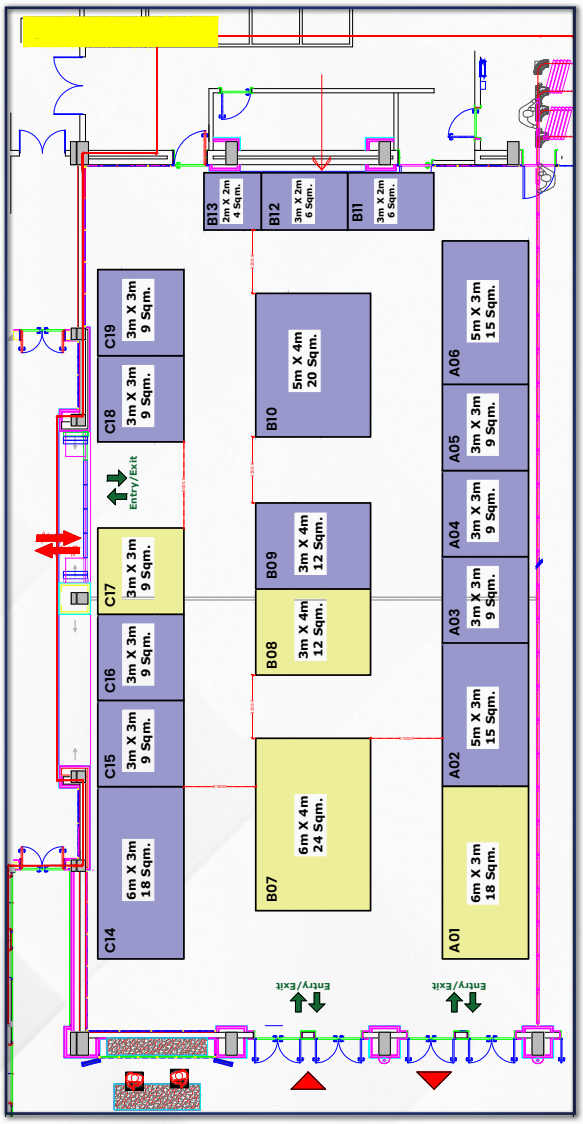

CONFERENCE
REGISTRATION

Pre-Conference Workshop + 2 Days Conference | US$ 1800

You will have access to:

- Opening Ceremony
- 2 Days Conference
- Awards Ceremony
- Gala Networking Dinner
- Additional Forums
- 1 Post Conference Workshop
- Participation Certificate
- Coffee Breaks & Delegate lunches
- Access to Exhibition Hall

Conference Only | 2 Days Conference | US$ 1400

You will have access to:

- Opening Ceremony
- 2 Days Conference
- Awards Ceremony
- Gala Networking Dinner
- Additional Forums
- Participation Certificate
- Coffee Breaks & Delegate lunches
- Access to Exhibition Hall

Pre-Conference Workshop Only | 1 Day Workshop | US$ 800

You will have access to:

- 1 Pre-Conference Workshop
- Participation Certificate
- Coffee Breaks & Delegate lunches

FOR MORE DETAILS

AI-HSSE 2027 Secretariat
Kingdom of Bahrain
Email: info@aihsse.com | **Website:** www.aihsse.com

EVENT HOST

Over a quarter of a century ago, the first Bahraini Society concerned with health and safety was established. This association is the first one in this field in Bahrain, and it has remained the most prominent and best way Health and Safety professionals in Bahrain share their experiences and network together.

EVENT ORGANISER

iCONEX Group is a global leader in organizing technical conferences, trade exhibitions, consumer shows, and live events, driven by innovation, vibrancy, and excellence.

With a strong presence across the GCC, Asia, Europe, USA, London, Delhi, and Mumbai, iCONEX has established itself as a trusted platform creator with specialized expertise in HSE, ESG, Energy, and Technology. The Group has a proven record of bringing together governments, industry leaders, and innovators to foster collaboration, knowledge exchange, and business excellence.

Guided by its vision to empower industries and shape the future, iCONEX continues to deliver world-class platforms that inspire impactful dialogue and transformative outcomes.

AI HSSE

20 - 22 April 2027

Gulf Convention Centre
Kingdom of Bahrain

GET INVOLVED

Farheen Sohail
M: +973 6698 8212 | **E:** farheen@iconexgulf.com

Scan to Visit
www.aihsse.com

#AIHSSE
#AIHSSE2027

www.aihsse.com

Organised By
iCONEX™